PROMENS

Materials Handling Products **Datasheet Drumtainer**

Version 2.0
Juni 2011

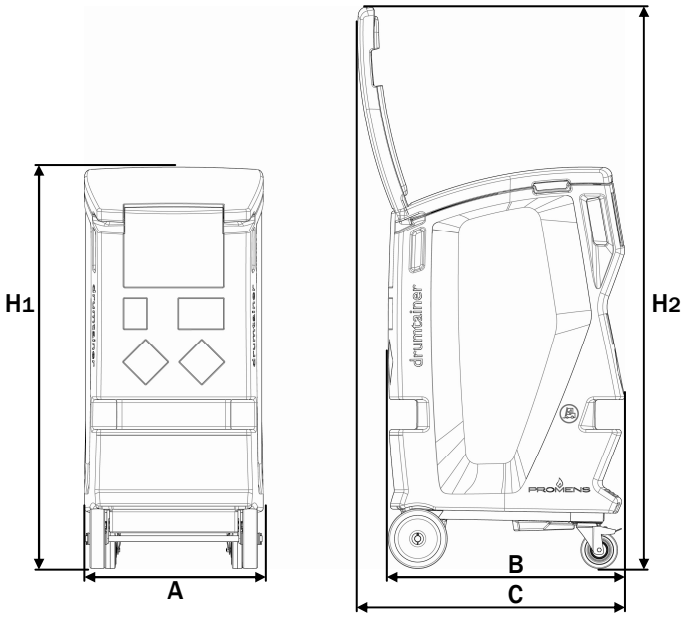

Product	Drumtainer
Application	The Drumtainer is a mobile overpack designed for convenient transportation, storage and handling of standard drums of 200–230 litres.
Maximum density	Capable of carrying products with a maximum density of 1.5 kg/litres
Material	Tank: Polyethylene (LLDPE) Chassis: Stainless Steel 1,4301 (304)
Containment capacity (litres)	300
Width (A, mm)	600
Length (B, mm)	800
Length with opened lid (C, mm)	906
Height (H_1, mm)	1360
Height with opened lid (H_2, mm)	1900
Stacking	Not stackable
Weight (kg)	34 (Wagon version: 37)
Certification	Vibration test: According to the test standard ASTM 4169-08, DC2 Schedule E (vehicle vibration), assurance level II. §12.4, ASTM D 4728-06 Method A & B DIBt approval: Spill container for drums - Z-40.22-478 (standard version only) UN: Overpack certification. Within the framework of the regulation for the transport of dangerous goods by road (ADR)
Labels	- Identification label - DIBt label - Overpack label - Orientation arrows label - Safety label Optional: Customer specific information on labels on front
Optional	Wagon version (without DIBt approval)
Max. load behind wagon (kg)	700
Colour outer container	Light grey, Dark grey, Light blue, Dark blue, Red, Yellow, Green
Colour lid	Light grey, Dark grey, Light blue, Dark blue, Red, Yellow, Green
Wheels	2x swivel castor with brake and 2x fixed castors, blue PU thread

Promens Deventer B.V.
Zweedsestraat 10 • 7418 BG Deventer • The Netherlands • Tel +31 (0) 570 660 706 • Fax +31 (0) 570 660 719 • mhpsales.deventer@promens.com • www.mhp.promens.com